TECHNICAL MANUAL
OPERATOR AND FIELD MAINTENANCE MANUAL

FOR
DBAL-D^2 (DUAL BEAM AIMING LASER-LIGHT EMITTING DIODE)

WITH VISIBLE POINTER (635nm) IR POINTER (850nm) and IR LED ILLUMINATOR (850nm)

DBAL-D^2

- ☐ P/N 40300____<5mW Red VIS Point, ≈.7mW IR Point, 600mW IR LED Illum
- ☐ P/N 40301____<5mW Green VIS Point, ≈.7mW IR Point, 600mW IR LED Illum

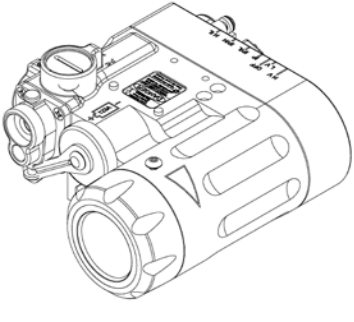

70 Garden Court • Monterey, CA 93940 U.S.A.
Tel 831-373-0701/800-235-2162 (outside CA) • Fax 831-373-0903
Sales@laserdevices.com • www.laserdevices.com

SAFETY SUMMARY

This safety summary contains general safety warnings and hazardous materials warnings that must be understood and applied during operation and maintenance of this equipment. Failure to observe these precautions could result in serious injury or death to personnel. Also included are explanations of safety and hazardous materials icons used within this technical manual. Table a-1contains the safety data conforming to the United States (US) Food and Drug Administration (FDA) Code of Federal Regulations Title 21.

EXPLANATION OF SAFETY WARNINGS ICONS

ACCIDENTAL DISCHARGE – hazard symbol indicates extreme danger for personnel from weapons fire.

EXPLOSION – hazard symbol shows that the material may explode if obstructed.

EYE INJURY - laser light hazard symbol indicates extreme danger for eyes from laser beams and reflections.

EXPLANATION OF SAFETY ALERTS

WARNING – Identifies a clear danger to the person performing the procedure.

CAUTION – Identifies risk of damage to the equipment.

NOTE – Used to highlight essential procedures, conditions, statements, or convey important instructional data to the user.

WARNING

INVISIBLE LASER RADIATION
AVOID DIRECT EXPOSURE TO THE BEAM

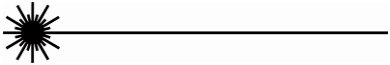

Green or Red Visible Pointer
LASER WAVELENGTH: 532nm or 635nm (±5nm)
OUTPUT: <4.4 mW (±0.5mW) Class 3a

- DO NOT stare into the laser beams.
- DO NOT look into the laser beams through binoculars or telescopes.
- DO NOT point the laser beams at mirror-like surfaces.
- DO NOT shine the laser beams into other individual's eyes.

WARNING

INVISIBLE LASER AND LED RADIATION
AVOID DIRECT EXPOSURE TO THE BEAMS

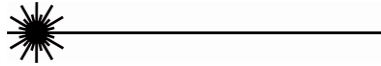

IR Pointer and Illuminator
LASER WAVELENGTH: 850nm (±5nm)
OUTPUT, Pointer: <0.6 mW (±0.1mW) Class 1
OUTPUT, Illuminator: <600 mW (±15mW) Eye Safe

- DO NOT stare into the infrared beam.
- DO NOT look into the infrared beam through binoculars or telescopes.
- DO NOT point the infrared beam at mirror-like surfaces.
- DO NOT shine the infrared beam into other individual's eyes.

Table a-1 Safety Data

US FDA Code of Federal Regulations (CFR) Title 21		
LASER	**SAFETY CLASS**	**NOHD (m)**
		Unaided
5mW RED Pointer		
Low Power <1mW	Class IIa	32.7m
High Power <5mW	Class IIIa	79.2m
5mW GREEN Pointer		
Low Power <1mW	Class IIa	17.1m
High Power<5mW	Class IIIa	45m
0.7mW IR Pointer		
Power <0.7mW	Class 1	0
600mW Illuminator		
Low Power <300mW	Eye Safe	0
High Power <600mW	Eye Safe	0

WARNING

ACCIDENTAL DISCHARGE

Be sure the weapon is **CLEAR** and on **SAFE** before proceeding.

WARNING

EXPLOSION

DO NOT store the DBAL-D^2 with the battery installed.

WARNING

EYE INJURY

Ensure the Activation Mode Selector Switch is in the OFF position before inspecting the Exit Port Lenses. If the Activation Selector Switch is not in the OFF position, the laser may be inadvertently activated by depressing the fire button on the back of the housing.

WARNING

ACCIDENTAL DISCHARGE

If the Laser Borelight System (LBS) is used to boresight the DBAL-D^2, be sure to remove the LBS from the weapon prior to firing.

WARNING

EYE INJURY

NEVER boresight in the High Power mode of operation.

CAUTION

DO NOT over-adjust the laser adjusters by forcing them beyond their end of travel.

CAUTION

Use ONLY authorized weapons cleaning supplies; permanent damage may occur.

CAUTION

DO NOT remove the Remote Cable Switch by pulling on the cable; clasp the cable plug assembly.

TABLE OF CONTENTS

LIST OF FIGURES

LIST OF TABLES

HOW TO USE THIS MANUAL

Usage
You must familiarize yourself with the entire manual before operating the equipment. Read the complete maintenance task before performing maintenance and follow all **WARNINGS**, **CAUTIONS** and **NOTES**.

Manual Overview
This manual contains information for Operating and Maintaining the DBAL-D^2 and laser safety.

Appendix A Repair Parts.

CHAPTER I

GENERAL INFORMATION

1.1 GENERAL INFORMATION

1.1.a Type of Manual:
Operator and Field Maintenance Manual.

1.1.b Model Number and Equipment Name:
40300_/40301_, DBAL-D^2, Dual Beam Aiming Laser-D^2.

1.1.c Purpose of Equipment:
To covertly illuminate and direct fire using an infrared (IR) laser pointer (POINT) and IR LED illuminator (ILLUM) for users equipped with a Night Vision Device (NVD), or to direct fire using a visible (VIS) red or green laser pointer for users not using a NVD.

1.1.d Specifications:
Specifications contained in this manual are subject to change without notice.

1.2 REPORTING EQUIPMENT IMPROVEMENT RECOMMENDATIONS
If you have a suggestion to improve the utility and performance of the DBAL-D^2, let us know. Mail your comments and suggestions to Laser Devices, Inc., 70 Garden Court, Monterey, CA 93940, USA, send a fax to 831-373-0903 or send an Email to Sales@laserdevices.com.

1.3 WARRANTY INFORMATION
This item shall conform to design, manufacturing, and performance requirements and be free from defects in material and workmanship for one (1) year from the date of manufacture. This warranty does not protect against damage due to misuse or mishandling.

1.4 CROSS REFERENCES

Common Name	Official Name
Battery Cap	Battery Box Cover
Shipping Case	Shipping Box
Cotton Swab	Disposable Applicator
Lens Covers	Exit Port Covers
Paddle Switch	Remote Cable Switch
Battery	CR 123A
Technical Manual	Operator and Field Maintenance Manual
Tape Fastener Loop	Fastener, Loop Tape
Tape Fastener Hook	Fastener, Hook Tape

1.5 LIST OF ABBREVIATIONS

C.....Celsius (Centigrade)
CCW.....Counter-clockwise
cm .....Centimeters
cont'd.....Continued
CTA .....Common Table of Allowance
CW .....Clockwise
EA .....Each
F .....Fahrenheit
HI.....High
ILLUM.....Illuminator
in .....Inches
IR.....Infrared
LBS .....Laser Borelight System
LED .....Light Emitting Diode
LO .....Low
m .....Meters
Max .....Maximum
Mfr .....Manufacturer
Min .....Minimum
MOM.....Momentary
mrad .....Milliradians
mW.....Milliwatts
nm .....Nanometers
No.....Number
NOHD.....Nominal Ocular Hazard Distance
NSN.....National Stock Number
NVD.....Night Vision Device
O.D. .....Optical Density
Para.....Paragraph
POINT .....Pointer
PWR.....Power
QTY.....Quantity
RAS.....Rail Adapter System
RMA .....Return Material Authorization
SR .....Service Representative
TM .....Technical Manual
VIS .....Visible

CHAPTER II

EQUIPMENT DESCRIPTION

2.1 SYSTEM DESCRIPTION

The DBAL-D^2 is a Class 3a laser device that features a visible pointer (VIS POINT) for daylight and low light operations, as well as an infrared (IR) pointer (IR POINT) and IR LED illuminator (IR ILLUM) for use with a NVD. The visible pointer may be activated in:

High power mode (H V) or
Low power mode (L V).

The IR beams may be activated individually or in combination:

High power IR POINT (IP),
High power IR POINT and low power IR ILLUM (IP/L),
High power IR POINT and high power IR ILLUM (IP/H), or
High power IR ILLUM (H IL).

The DBAL-D^2 emits a highly collimated beam of IR light for precise aiming of the weapon and an IR LED illuminator for projecting light on the target or target area. The IR LED illuminator is equipped with an adjustable bezel to vary the size of the illumination beam based on the size of and distance to the target. For long range targets, focus IR LED illuminator at two (2) degrees (°). For short range wide illumination, defocus illuminator to 30 degrees. The visible pointer and the IR pointer are co-aligned. The visible pointer may be used to boresight the device without the requirement of a NVD and will simultaneously boresight the IR pointer.

The DBAL-D^2 may be weapon mounted using the Quick Release Mount. The DBAL-D^2 may be used to accurately direct fire as well as illuminate and identify targets. Figure 2-1 identifies the distinguishing parts of the DBAL-D^2. Table 2-1 provides performance specifications.

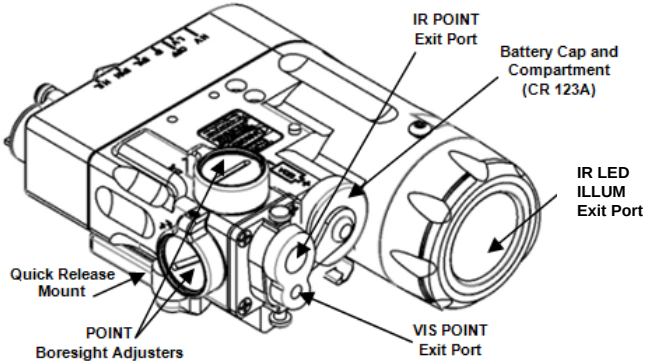

Figure 2-1 DBAL-D^2 Features

2.2 GENERAL CHARACTERISTICS

Table 2-1 Weight, Dimensions and Performance

WEIGHT		
(with one battery, CR 123A)		<12.5oz/354.4 grams
DIMENSIONS		
Length		3.95 in/10.03 cm
Width		3.37 in/8.56 cm
Height (including mounting bracket)		1.59 in/4.04 cm
PERFORMANCE		
Wavelength		
Red Visible Pointer		635 nm (± 5 nm)
Green Visible Pointer		532 nm (± 5 nm)
IR Pointer		850 nm (± 5 nm)
IR LED illuminator		850 nm (± 5 nm)
Output Power		
Visible Pointer	Low High	0.6 mW (± 0.1 mW) 4.4 mW (± 0.5 mW)
IR Pointer		0.6 mW (± 0.1 mW)
IR LED illuminator		600 mW (±15 mW)
Beam Divergence		
Visible Pointer		0.5 mrad (±0.3 mrad)
IR Pointer		0.5 mrad (±0.3 mrad)
IR LED Illuminator		2° to 30°
Battery Life (CR 123A) IR LED Illuminator		1 hour on high/high 2 hours on high/low
Immersion		
Waterproof		20 m
VISIBLE and IR POINTER (STARLIGHT CONDITIONS)		
Red Visible Pointer (<5mW)		10 m/500 m
Green Visible Pointer (<5mW)		30 m/1500 m
IR Pointer (0.6mW)		≤225 m
IR LED ILLUMINATOR (STARLIGHT CONDITIONS)		
IR LED illuminator (<600mW)		High > 1000 m Low ≤ 300 m

2.3 DESCRIPTION OF MAJOR COMPONENTS

Figure 2-2 shows the key components included in the DBAL-D^2 package.

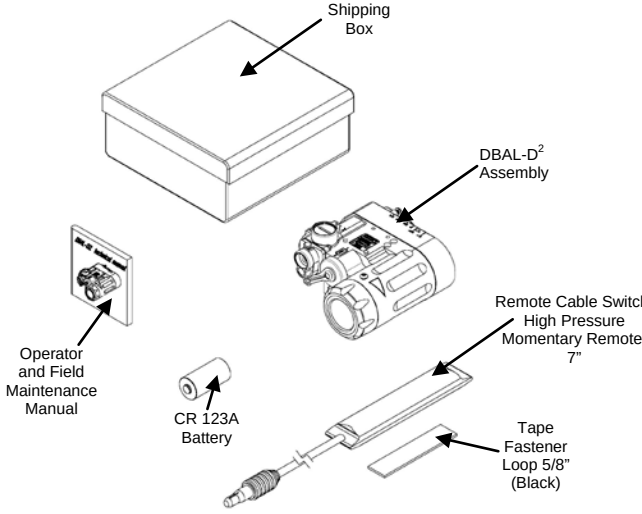

Figure 2-2 DBAL-D^2 Major Components

2.3.a Shipping Box
The DBAL-D^2 is provided in a plastic shipping box with foam insert.

2.3.b DBAL-D^2 Assembly
The DBAL-D^2 device provides a visible pointer, IR pointer, and adjustable focus IR LED illuminator. The device is used for aiming, signaling, command and control and for purposes of supplying supplemental IR illumination.

2.3.c Remote Cable Switch
A seven (7) inch straight Remote Cable Switch activates the DBAL-D^2 in a momentary (MOM) mode by depressing the pressure pad once. Pressing the pressure pad twice in rapid succession will activate the device continuously for five (5) minutes. Pressing the pressure pad again will return the device to momentary activation. The pressure pad provides a tactile (silent) click that indicates when the switch has been activated. A Tape Fastener Hook is pre-attached by the manufacturer to the pressure pad switch and is used to secure the Remote Cable Switch to the weapon in a position convenient to the user.

2.3.d Tape Fastener Loop
The Tape Fastener Loop is provided to secure the Remote Cable Switch to the weapon in a position convenient to the user.

2.3.e Battery
One CR 123A Lithium battery is used as a power supply for operating the DBAL-D^2. The use of a high-quality battery is recommended.

2.3.f Operator and Field Maintenance Manual

NOTE

You must read the entire Operator and Field Maintenance Manual before operating the DBAL-D^2 and follow all **WARNINGS**, **CAUTIONS** and **NOTES**.

This Operator and Field Maintenance Manual provides safety and equipment information; operating instructions; mounting, zeroing, and maintenance procedures; and troubleshooting procedures.

CHAPTER III

SECTION I OPERATING INSTRUCTIONS

3.1 DBAL-D^2 CONTROLS AND INDICATORS

This section contains a description of the controls and adjustments for the DBAL-D^2.

3.1.a Battery Installation

WARNING

EXPLOSION

DO NOT store the DBAL-D^2 with the battery installed.

NOTE

Loss or removal of the O-ring from the battery cap may cause water to enter the DBAL-D^2.

Unscrew the battery cap in a CCW direction. Remove and properly discard the spent battery. Inspect the battery compartment for dirt, moisture and corrosion. Clean the battery compartment as needed (refer to Paragraph 4.3.c). Inspect the O-ring seal on the battery cap to make sure it is free of sand and dirt particles and that it has not been damaged (see Paragraph **Error! Reference source not found.**). Install the battery as indicated by the marking on the DBAL-D^2 housing (see Figure 3-1). Reinstall the battery cap and hand tighten in a CW direction.

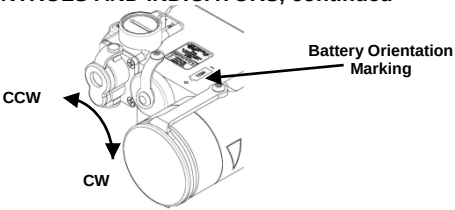

Figure 3-1 Battery Installation

3.1.b Activation Mode Selector Switch

NOTE

DBAL-D^2 will not operate if the rotary switch is not precisely aligned with the marked switch position.

In extreme cold temperatures the switch may offer more resistance.

The Activation Mode Selector Switch is located on the center rear of the DBAL-D^2 housing (see Figure 3-2). The switch is used to select between the various modes of operation. The Activation Mode Selector Switch has seven (7) positions. See Table 3-1.

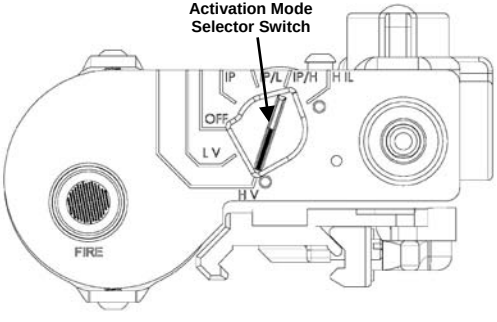

Figure 3-2 Activation Mode Selector Switch

3.2 DBAL-D^2 CONTROLS AND INDICATORS, continued

Table 3-1 Activation Mode Selector Switch Functions

Item #	Mode	Switch Position	Activation Method	Use
1	High Visible Pointer	H V	When Remote Cable Switch or Fire Button switch is depressed.	Used for pointing or aiming at close range in daylight or at longer range in low light conditions. DO NOT use for boresighting the weapon.
2	Low Visible Pointer	L V	When Remote Cable Switch or Fire Button switch is depressed.	Primarily used for boresighting the laser to the weapon in low light conditions or close quarter combat situations.
3	OFF	OFF	OFF	Not in use or in storage.
4	High IR Pointer	IP	When Remote Cable Switch or Fire Button switch is depressed.	Used for acquiring targets.
5	High IR Pointer/ Low IR LED illuminator	IP/L	When Remote Cable Switch or Fire Button switch is depressed.	Used for pointing and aiming indoors or outdoors at close range. The IR LED illuminator is used to provide illumination of shadowed areas.
6	High IR Pointer/ High IR LED illuminator	IP/H	When Remote Cable Switch or Fire Button switch is depressed.	Illuminates the target area and provides an aiming point to accurately engage the target.
7	High IR LED illuminator	H IL	When Remote Cable Switch or Fire Button switch is depressed.	Used for supplemental illumination of a shadowed area.

3.1.c Integrated Momentary Activation Switch

NOTE

Click sound is minimized by depressing the center of the switch.

The Integrated Momentary Activation Switch is located on the left rear of the DBAL-D^2 housing above the word FIRE (see Figure 3-3). Firmly pressing and holding the switch activates the DBAL-D^2 laser selected by the Activation Mode Selector Switch. When the switch is released, the selected laser turns off.

Pressing the Integrated Momentary Activation Switch twice in rapid succession will activate the DBAL-D^2 in a continuous ON mode for five (5) minutes. Pressing the Integrated Momentary Activation Switch once again will return the device to the momentary mode.

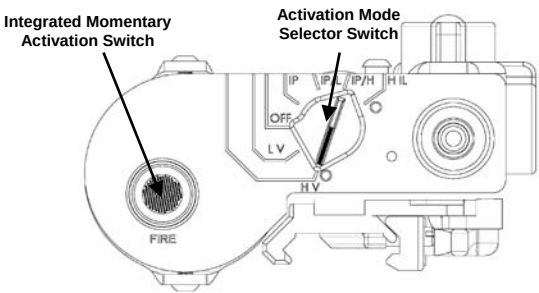

Figure 3-3 Integrated Momentary Activation Switch

If the unit is locked in continuous ON mode, rotation of the Integrated Momentary Activation Switch does not return the device

to momentary mode unless the switch is moved through the OFF position. The five (5) minute time out remains in effect.

3.1.d Activation Indicator/Low Battery Indicator.
A green LED is located on the rear housing at the bottom right of the Activation Mode Selector Switch (see Figure 3-4). When continuously ON, the LED indicates that the DBAL-D^2 is actively emitting laser or LED energy. If the LED is blinking, the battery is low and must be replaced.

When the Activation Mode Selector Switch is turned to an operating position, the LED will light up if either the Remote Cable Switch or Integrated Momentary Activation Switch is depressed, indicating that the device is ON. The LED will remain lit until the Integrated Momentary Activation Switch or Remote Cable Switch is released.

When the Remote Cable Switch or Integrated Momentary Activation Switch has been depressed twice in rapid succession, the LED will light up indicating that the unit is functioning in a constant ON mode. The LED will remain lit for five (5) minutes or until Integrated Momentary Activation Switch or Remote Cable Switch is pressed once again to return the device to momentary activation.

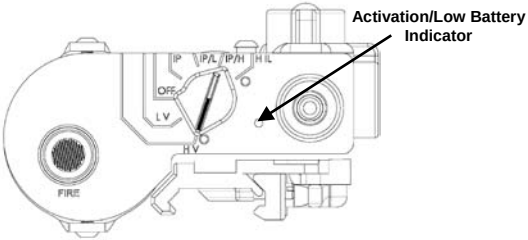

Figure 3-4 Activation LED

3.1.e Remote Cable Switch

CAUTION

DO NOT remove the Remote Cable Switch by pulling on the cable.

NOTE

When installing the Remote Cable Switch, gently twist the plug into the remote cable port.

The DBAL-D^2 Activation Mode Selector Switch must be turned to a mode setting in order to effectively use the Remote Cable Switch.

DBAL-D^2 will not operate if the rotary switches are not precisely aligned with the marked switch position.

The Remote Cable Switch plugs into the back of the DBAL-D^2 (see Figure 3-5). Depressing the Remote Cable Switch activates the DBAL-D^2 in the mode selected by the Activation Mode Selector Switch. When the Remote Cable Switch is released, the selected beam turns off.

3.2 DBAL-D^2 CONTROLS AND INDICATORS, continued

In the Momentary Mode when the Remote Cable Switch has been pressed twice in rapid succession, DBAL-D^2 will activate in a constant ON mode for 5 minutes unless the Remote Cable Switch is pressed once again to return the device to momentary activation.

When the Remote Cable Switch is installed into the DBAL-D^2, it automatically locks in place. To remove it, pull back on the plug's sleeve.

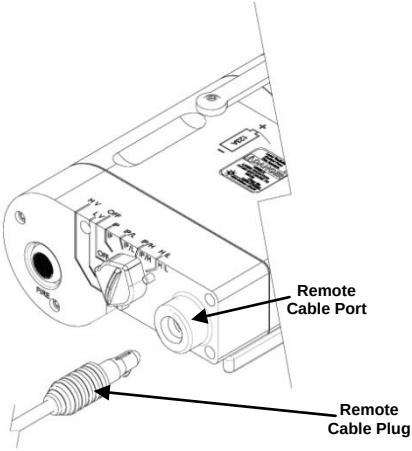

Figure 3-5 Installation of the Remote Cable Switch

3.1.f Exit Port Covers

The DBAL-D^2 is supplied with a VIS POINT/IR POINT Exit Port Cover and an IR LED illuminator Exit Port Cover. The Exit Port Covers prevent laser energy emission when properly installed over the exit ports. The exit port covers are held in place by the retention studs located above and below each exit window. Figure 3-6 illustrates the Exit Port Covers.

Install the Exit Port Cover over the pointers and illuminator by gently pulling it forward until it may be moved into place over the laser Exit Port Lens. Align the step on the inside surface of the Exit Port cover with the exit port and press the cover firmly into place. When the DBAL-D^2 is not in use, the Exit Port Covers shall be installed over the lenses to prevent accidental emission of laser energy and to protect the Exit Port lenses.

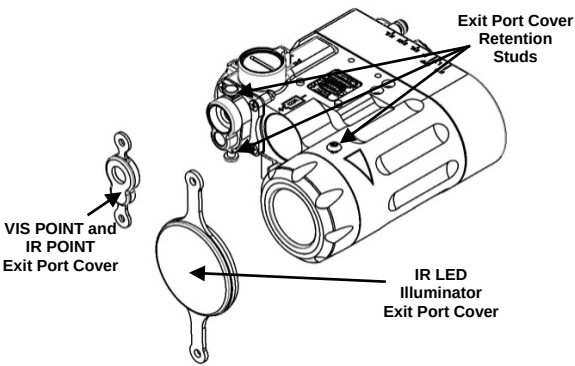

Figure 3-6 Exit Port Cover Installation

3.1.g IR LED illuminator Focusing Knob

CAUTION

To prevent damage to the IR LED Illuminator Exit Port Cover, open the Exit Port Cover before turning the knob to adjust the focus.

NOTE

In extreme cold temperatures the illuminator focusing knob may offer more resistance.

The illuminator focus knob direction of rotation and the corresponding beam size (2° to 30°) is indicated by the triangle on the side of the housing, refer to Figure 3-7.

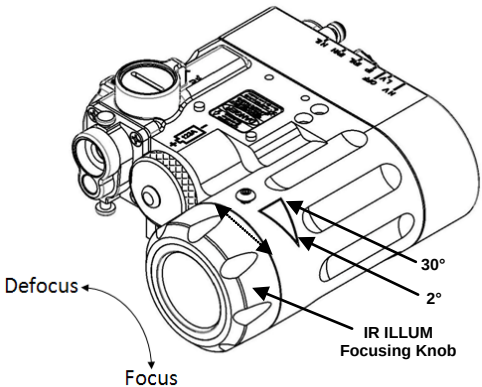

Figure 3-7 The IR LED Illuminator Focusing Knob

3.1.h Windage and Elevation Adjusters

NOTES

The windage and elevation adjusters may offer some resistance as you turn it in a CW direction from the factory neutral position. When the adjuster is harder to turn it has reached the maximum CW travel.

When the adjuster is at its maximum CW or CCW point of travel and is turned in the opposite direction the laser point may trace a small loop on the target. This is normal and does not indicate a failure condition.

A positive load is required on the adjustment mechanism when boresighting/zeroing the DBAL-D^2 for purposes of retaining the set alignment. See paragraph 3.4.

The adjuster knobs on the DBAL-D^2 may vary slightly in the force required to turn the adjusters. This is normal and does not indicate a failure condition.

At the maximum CW or CCW travel the DBAL-D^2 lasers may not move a full 1cm per click, or may jump squares on the target. If this happens the DBAL-D^2 should be returned to its factory neutral preset as described in Section 3.5.

DBAL-D^2 is for use on weapons where the MIL-STD-1913 rail is parallel with the bore of the weapon. In the factory neutral position the visible pointer/IR pointer should project on the same side of the target as the laser is mounted and must fall within 1.5 mrad circle/10.2 cm of the bore at 25 meters. See Section 3.5.

The DBAL-D^2 is equipped with adjusters for tuning the visible and IR pointer for elevation and azimuth (see Figure 3-8 and Figure 3-9). Each adjuster click will move the laser point by 1 cm at 25 meters.

The visible pointer/IR pointer adjuster guards are marked with arrows and the letters U/D and R/L indicating the direction that the shot group will move if an adjuster is turned when the laser is mounted in the horizontal (top) position. The adjusters will move the visible pointer/IR pointer approximately 10” or 25cm in each direction from the factory neutral preset position at 25 meters. See Paragraph 3.5.

The visible pointer and the IR pointer are adjusted using the same adjusters. Boresighting/zeroing the visible pointer will align the IR pointer and vice versa. For improved accuracy, always align the primary laser expected to be used on the mission.

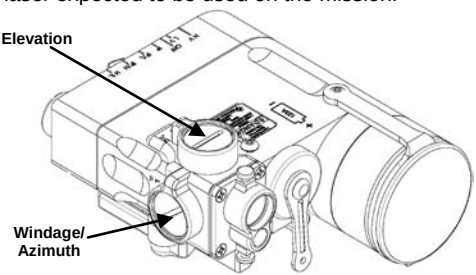

Figure 3-8 Boresight Windage and Elevation Adjusters for Aiming and Illumination Beams

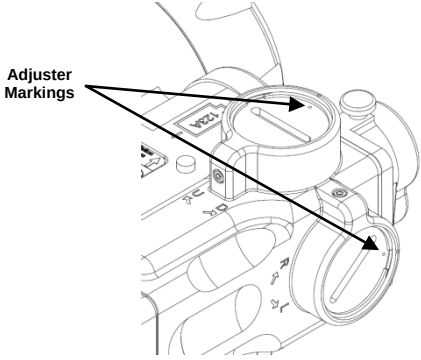

Figure 3-9 Adjuster Markings

3.1.i Visible Pointer and IR Pointer Adjustment

Table 3-2 indicates the direction of adjuster rotation and resultant shot group movement for zeroing the visible pointer or IR pointer to the weapon when the DBAL-D^2 is Side Mounted.

Table 3-2 Adjuster Rotation and Shot Group Movement for the Visible Pointer and IR pointer (Side Mounted-Left)

ZEROING THE AIMING LASERS	Adjuster Movement	Shot Group Movement
Side Adjuster Elevation (guard marked U/D)	CW CCW	Left Right
Top Adjuster Azimuth (guard marked R/L)	CW CCW	Up Down
When adjusting in a CCW direction, apply a positive load to the adjuster by turning an additional ¼ turn (8 clicks) CCW, then make the final boresighting/zeroing adjustments by turning the adjusters in a CW direction. No positive load is required when adjustments are made in the CW direction.		

CHAPTER III

SECTION II MOUNTING PROCEDURES

3.2 MOUNTING PROCEDURES

WARNING

ACCIDENTAL DISCHARGE

Be sure the weapon is **CLEAR** and on **SAFE** before proceeding.

NOTE

The DBAL-D^2 may be placed at any position (forward and aft) on the rail that is convenient for the user. If the DBAL-D^2 is removed from the rail, note of the position at which it was zeroed, and return it to the same position in order to ensure that zero is retained.

Tests have shown that accuracy is best when the DBAL-D^2 is mounted on the forward rails.

Failure to fully tighten the Quick Release Mount will cause zero retention problems. Insure that the base of the Quick Release Mount is fully seated on the MIL-STD-1913 rail with NO front or rear overhang.

An integrated Quick Release Mount is used to attach the DBAL-D^2 to weapons equipped with a MIL-STD-1913 rail. Place the device far enough back on the rail to allow for battery replacement without removal from the weapon. If removed, the DBAL-D^2 must be returned to the same position on the rail to retain zero.

The DBAL-D^2 may be mounted on the TOP, LEFT, or RIGHT rail using the Quick Release Mount. Open the Quick Release Mount so that it is perpendicular to the DBAL-D^2 housing. See Figure 3-10.

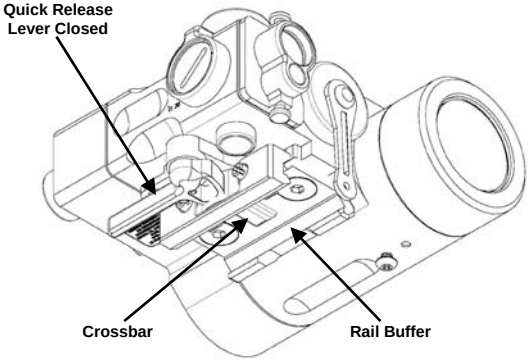

Figure 3-10 Quick Release Mount Configuration

Place the rail buffer against the left side of the MIL-STD-1913 rail and align the crossbar on the bottom of the mount with a slot on the rail. Push forward on the DBAL-D^2 so that the crossbar contacts the front of the slot on the MIL-STD-1913 rail. Move the Quick Release Lever arm so that it is parallel with the body of the laser housing. See Figure 3-10.

Install the Remote Cable Switch in a convenient location.

CHAPTER III

SECTION III BORESIGHTING/ZEROING PROCEDURES

WARNING

ACCIDENTAL DISCHARGE

Be sure the weapon is CLEAR and on SAFE before boresighting.

This section provides boresighting/zeroing instructions using the MBS-1WE Laser Borelight System (LBS), LDI Part No. 3160635 on a 25 meter range.

3.3 PLACING A POSITIVE LOAD ON THE ADJUSTERS

CAUTION

DO NOT over-adjust the adjusters by forcing them beyond their end of travel.

NOTE

ALWAYS Boresight/Zero the DBAL-D^2 starting with the Adjuster marked D/U.

When moving the adjusters, make sure that the adjustment mechanism has engaged a detent and has not stopped between detents. Failure to properly engage a detent may impact accuracy as the laser may move when the weapon is fired.

Positive Load is required anytime an adjustment to visible pointer/IR pointer is made in a CCW direction. A Positive Load is not required when making a CW adjustment.

Positive Load is the controlled compression of the spring within the adjuster mechanism to insure the highest level of accuracy is maintained after the weapon is Boresighted or Zeroed.

When adjusting in a CCW direction, apply a positive load to the adjuster by turning an additional ¼ turn (8 clicks) CCW, then make the final adjustment by turning the adjuster CW. For example, to move the adjuster one (1) click CCW, turn the adjuster CCW 8 clicks and then turn it CW 7 clicks to the new position.

3.4 FACTORY NEUTRAL PRESET

CAUTION

DO NOT over-adjust the adjusters by forcing them beyond their end of travel.

NOTE

ALWAYS Boresight/Zero the DBAL-D^2 starting with the Adjuster marked D/U.

When moving the adjusters, make sure that the adjustment mechanism had engaged a detent and has not stopped between detents. Failure to properly engage a detent may adversely impact accuracy as the laser may move to the next detent when the weapon is fired.

The adjuster may offer some resistance as you turn it in a CW direction from the factory neutral position. When the adjuster is harder to turn it has reached the maximum CW travel.

The DBAL-D^2 is preset at the factory to a neutral position, see Figure 3-11. In the neutral position the laser beam is parallel to the bore of the weapon

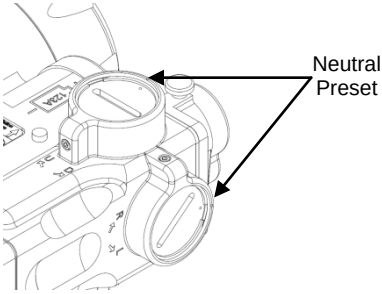

Figure 3-11 Neutral Preset

Table 3-3 Factory Neutral Preset

Adjuster	Instruction
Adjuster Guard marked U/D for the visible pointer and IR pointer	First, turn CW to end of travel. DO NOT force past mechanical stop. Next, turn CCW 1¼ turn. Finally, turn CW to align the dot on the adjuster with the dot on the adjuster guard.
Adjuster Guard marked R/L for the visible pointer and IR pointer	

3.5 BORESIGHT USING THE LASER BORELIGHT SYSTEM (LBS) ZEROING

3.5.a General

WARNING

EYE INJURY

NEVER boresight in the High Power mode of operation.

CAUTION

DO NOT over-adjust the adjusters by forcing them beyond their end of travel.

NOTES

The mission will dictate which aiming laser (visible pointer/ IR pointer) will be boresighted to achieve maximum accuracy.

A positive load is required on the adjustment mechanism when boresighting/zeroing the DBAL-D^2 for purposes of retaining the set alignment. See paragraph 3.4.

Always move the adjusters slowly, one click at a time, to prevent the adjuster from jumping detents.

In extreme cold temperatures the adjusters may offer more resistance. The adjuster may offer some resistance as you turn it in a CW direction from the factory neutral position. When the adjuster is harder to turn, it has reached the maximum CW travel. When the adjuster is at its maximum CW or CCW point of travel and is turned in the opposite direction, the laser point may trace a small loop on the target. This is normal and does not indicate a failure condition.

The adjuster knobs on the DBAL-D^2 may vary slightly in the force required to turn the adjusters. This is normal and does not indicate a failure condition.

At the maximum CW or CCW travel the DBAL-D^2 lasers may not move a full 1cm per click at 25 meters, or may jump squares on the target. If this happens the DBAL-D^2 should be returned to its factory neutral preset as described in Section 3.5.

3.5.b Zeroing on a 25 Meter Range

This procedure is used to zero the DBAL-D^2. Each adjuster click moves the strike point by 1 cm on the M16A2/M16A4 25 meter zeroing target. Refer to Figure 3-12 and Figure 3-13.

1. On a 25 meter zeroing target, mark the designated strike point and designated 4 cm/6 cm strike zone based on the weapon you are using.

2. Mount the target on an “E” silhouette or other suitable surface at 25m.

3. Set the adjusters to their factory neutral position as described in Paragraph 3.5.

4. Activate the aiming laser (visible pointer or IR pointer) to be zeroed by rotating the Activation Mode Selector Switch to the desired position. Press the Integrated Momentary Activation Switch or the Remote Cable Switch twice in rapid succession to activate the laser continuously. When aligning the IR pointer, leave the IR LED ILLUM Exit Port Cover in place. Aim center mass of the target until the aiming laser disappears through the 4 cm cut out.

5. Fire a 3-round shot group and note the center of the shot group relative to the designated strike zone.

6. Adjust the aiming beam adjusters to move the center of the shot group to the designated strike zone.

7. Repeat steps 5 and 6 until the shot group falls within the strike zone.

8. When firing the M16, M4 series series of weapons, when 5 out of 6 consecutive rounds are in the designated 4cm strike zone you are zeroed. When firing the M240 and M249 series of weapons, when 5

out of 12 non-consecutive rounds are within a 6cm square, the weapon is zeroed.

9. Rotate the DBAL-D^2 Activation Mode Selector Switch to **OFF.**

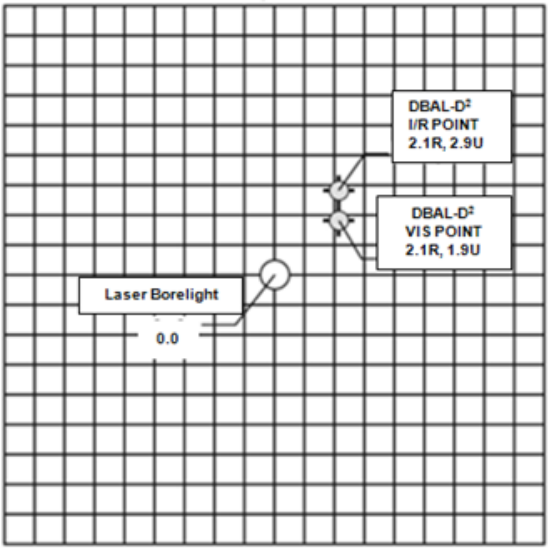

Zero Target Data for M4/M16A4

1. Stabilize Weapon
2. Align Laser Borelight on its dot.
3. Adjust DBAL-D2 until aiming laser is centered on the dot – cross hair.
4. Apply a positive load to the adjusters.

25m Boresight Target for 300m Zero

Figure 3-12 25m Boresight Target

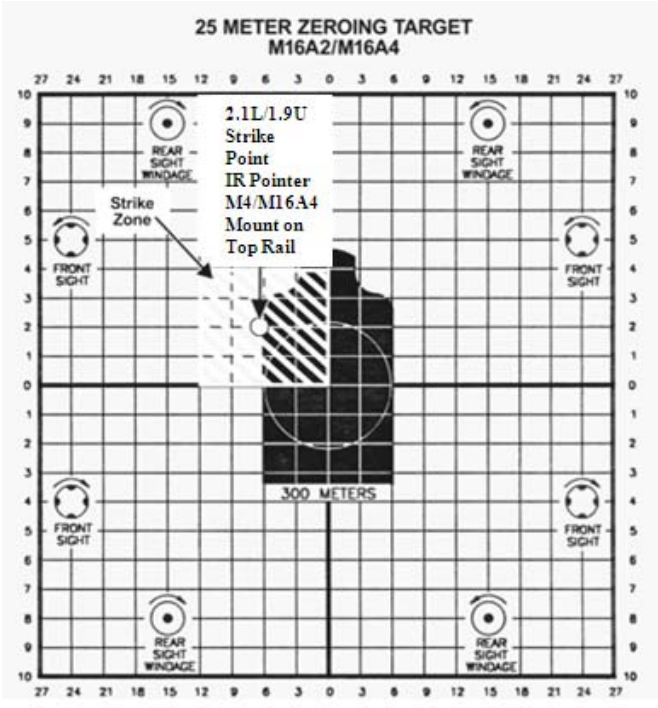

Figure 3-13 25m Zeroing Target

CHAPTER IV

SECTION I USER PREVENTIVE MAINTENANCE CHECKS

4.1 GENERAL

Table 4-1 Preventive Maintenance Checks, has been provided so that you may keep your equipment in good operating condition.

NOTE

Perform functional tests in the order listed in Table 4-1. Operating Procedures are detailed in Chapter III, Section I.

Functional testing of the DBAL-D^2 to ensure proper operation should be performed in a dark room or area away from light. Viewing of IR beams must be performed with a NVD.

4.1.a Warnings and Cautions

Always observe the **WARNINGS** and **CAUTIONS** appearing in the table.

4.1.b Explanation of Table Entries

1. Item Number column. Numbers in this column are for reference. Item numbers also appear in the order that you must perform the checks and services listed.

2. Interval column. This column tells you when you must do the procedure in the procedure column. BEFORE (B) PROCEDURES must be done before you operate or use the equipment. DURING (D) PROCEDURES must be done during the time you are operating or using the equipment. AFTER (A) PROCEDURES must be done immediately after you have operated or used the equipment.

3. Location Item to Check/Service column. This column provides the location and the item to be checked or serviced.

USER PREVENTATIVE MAINTENANCE CHECKS, continued

4. Procedure Column. This column provides the procedures you must perform.

5. Not Fully Mission Capable If column. Information in this column tells you what faults will keep your equipment from being capable of performing its primary mission.

Be sure to observe all special information and notes that appear in the table.

Table 4-1 Preventive Maintenance Checks

Item No.	Interval	Location of Item to Check/ Service	Procedure	Not Fully Mission Capable if:
1	B/D/A	Exterior	Check housing for separation between the front and the rear section of the housing, missing screws, switch knobs, and azimuth and elevation adjuster covers.	A gap appears between the front and the rear section of the housing, missing switch knobs, or adjuster covers.
WARNING: DO NOT STARE DIRECTLY INTO VISIBLE OR IR LIGHT BEAMS				
2	B/A	Exit Port Covers	Check for broken or missing covers, exit port cover retention studs. Move the Exit Port Covers to the open position.	Not Applicable (N/A)
3	B/A	Exit Port Lens	Check for dirty, cracked, or broken lenses or missing illuminator focusing adjustment.	If lens is cracked or missing or missing illuminator focusing knob.
4	B/A	Windage/ Elevation Adjusters	Check for broken, missing or stripped adjusters.	Adjusters broke, missing or stripped or laser fails to move.
5	B/D/A	Remote Cable Port	Check for mud or dirt and clean as needed.	N/A
6	B/A	Battery Compartment	Check for corrosion, presence of O-ring, spring, battery cap lanyard. Inspect threads for dirt or damage.	Contacts are corroded or broken.

Item No.	Interval	Location of Item to Check/ Service	Procedure	Not Fully Mission Capable if:
7	B/D/A	Quick Release Mount	Check attachment to housing, broken, missing parts. Inspect rail buffer, crossbar and mount base for dirt and corrosion. If laser is loose on the rail, move to a different position on the rail or move to a different rail on weapon, or replace the rail on weapon.	Quick Release mount is loose, parts are missing or broken.
8	B/A	Battery Compartment O-ring	Check O-ring for cuts, cracks. Lubricate as needed.	Cracked or cut; may cause leakage into unit.
9	B/A	Activation Mode Selector Switch and Integrated Momentary Activation Switch	Select L V using the Activation Mode Selector Switch. Select FIRE and observe the beam spot on wall. Repeat for each laser activation position.	Activation Mode Selector Switch inoperative with the visible pointer, IR pointer, or IR LED illuminator beam spot not visible.
10	B	Boresight Alignment	Confirm that the IR pointer or visible pointer to be used on the mission is boresighted/ zeroed on the weapon on which it will be mounted. Check to make sure that the visible pointer/ IR pointer projects on the same side of the target as the laser is mounted and falls within 1.5 mrad circle/10.2 cm of the bore at 25 meters.	Cannot be zeroed or boresighted to weapon.
11	B/D/A	LED Status Indicator	Observe green LED is lit and does not flash when lasing.	Indicator is flashing designating low battery.
12	B	Exit Port Covers	Close exit port covers and press into place. Activate visible laser. Visibly check to make sure no light is being emitted from around the cover.	N/A
13	A	Battery	Remove battery.	No, low or corroded battery.

CHAPTER IV

SECTION II TROUBLESHOOTING

4.2 GENERAL

The purpose of troubleshooting is to systematically search and identify the source of a problem. The most frequent equipment malfunctions, probable causes and corrective actions for the DBAL-D^2 are listed in Table 4-2. Perform the tests, inspections and corrective actions in the order they are listed. This manual does not list all malfunctions, tests, inspections, or corrective actions that may occur.

Table 4-2 Troubleshooting

Item No.	Malfunction	Test/Inspection	Corrective Action	Ref. Para.
NOTE: DBAL-D^2 WILL NOT OPERATE IF THE ROTARY SWITCH IS NOT PRECISELY ALIGNED				
1	Pointer/ Illuminator beams fail to come on or stay on	Ensure Activation switch is on and Mode selector switch is in proper position.	Properly align switch.	3.2.b
		Verify Exit Port Cover is removed and that the Exit Port Lens is not obscured by mud/dirt.	Remove Exit Port Covers. Clean pointer and illuminator Exit Port lenses.	4.4.e 4.3.b
		Verify battery installation.	Install new battery. Tighten battery cap.	3.2.a
		Inspect battery cap for damage or corrosion.	Contact LDI.	5.3.a
		Inspect battery contact spring in the battery compartment for damage or corrosion.	Contact LDI.	5.3.a
2	Pointer/ Illuminator beams have become weak (not as bright)	Verify Exit Port Cover is removed and that the Exit Port Lens is not obscured by mud/dirt.	Remove Exit Port Covers. Clean pointer and illuminator Exit Port lenses.	4.4.e 4.3.b

Item No.	Malfunction	Test/Inspection	Corrective Action	Ref. Para.
2	Weak Beam (continued)	Verify Exit Port Lens is not scratched or pitted.	Contact LDI.	5.3.a
		Verify battery installation.	Install new battery. Tighten battery cap.	3.2.a
3	Low Battery Indicator Light remains on when new battery is installed	Inspect battery compartment for corrosion.	Clean battery compartment.	4.3.c
		Inspect Battery Cap contact for corrosion.	Clean battery cap.	4.3.d
		Inspect battery cap and housing threads for contamination.	Clean battery cap and housing threads.	4.3.e
4	Beams do NOT move	Verify adjuster function.	Clean as required.	4.3.a
5	Remote Cable Switch inoperable, but Integrated Momentary Activation Switch functions	Verify Remote Cable Switch plug is fully seated.	Reconnect plug.	3.2.e
		Verify Remote Cable Port is free of mud/dirt.	Flush with water.	4.3.g
		Inspect Remote Cable Plug contacts.	Clean as needed.	4.3.g
		Verify function of Remote Cable Switch.	Contact LDI.	5.3.a
6	Pointer beam may not be zeroed to weapon	Verify Quick Release Mount is properly positioned/ secured to weapon.	Re-mount and properly position and secure.	3.3
		Laser is loose on rail.	Move laser to different position on rail or move to different rail on weapon or replace rail on weapon.	3.3
		Inspect mount base for corrosion or dirt.	Clean as required.	4.3.a
		Verify device is properly secured to Quick Release Mount.	Contact LDI.	5.3.a
		Verify Quick Release Mount is not damaged.	Contact LDI.	5.3.a
7	Illuminator knob turns, but beam does not change	Verify knob is free of mud and dirt.	Clean as required.	4.3.a

CHAPTER IV

SECTION III MAINTENANCE

4.3 GENERAL

WARNING

EXPLOSION

DO NOT store the DBAL-D^2 with the battery installed.

CAUTION

The use of gun cleaning agents that contain perchloroethylene or methylene chloride may permanently damage the DBAL-D^2 system.

The DBAL-D^2 is a rugged, compact laser device that is designed to operate in severe environments. The exterior housing is made of aircraft grade aluminum and the outer components are made of chemically resistant materials that will not be harmed by substances normally encountered. User maintenance is limited to the inspection and cleaning of the DBAL-D^2 external surfaces, replacement of the battery before each use and removal of the battery after each use.

4.3.a External Cleaning

Clean the exterior of the DBAL-D^2 by flushing with water and wiping with a soft cloth. Such cleaning should be done whenever the DBAL-D^2 becomes dirty or after exposure to salt water.

4.3.b Exit Port Lens Cleaning

To clean the pointer and illuminator Exit Port Lenses, wipe clean using a soft cloth or disposable applicator dampened with water.

4.3.c Battery Compartment

Before each use, inspect the battery and battery compartment for dirt, dust or corrosion. If dirty, clean using a soft cloth or disposable applicator.

4.3.d Battery Cap

Before each use, inspect the battery cap for dirt, dust or corrosion. If dirty, clean using a soft cloth or disposable applicator. Prior to water operations or emersion, inspect the O-ring seals in the battery cap to make sure they are free of sand or dirt particles. If the O-ring becomes cut, nicked or dried out, it should be replaced. If the battery cap is bent or scratched in the O-ring seating area, it should be replaced.

4.3.e Battery Compartment and Housing Threads

Inspect threading on the battery cap and housing for contamination. If the threading appears to be oily or dirty, clean with Isopropyl Alcohol using a soft, clean cloth.

4.3.f IR LED illuminator

Prior to water operations or emersion, make sure that the IR LED Illuminator Focusing Knob has been tightened in a CW direction so that it is seated on the housing. This will fully compress the internal O-rings to prevent the possibility of water infiltrating the housing.

4.3.g Battery Removal and Replacement

Refer to Chapter III, Section I, Paragraph 3.2.a for Battery Installation procedures. No special tools or equipment are required to replace the battery.

Unscrew the battery cap in a CCW direction. Remove and properly discard the spent battery. Inspect the battery compartment for dirt, moisture and corrosion. Install the battery as indicated by the marking on the DBAL-D^2 housing. Reinstall the battery cap and hand tighten in a CW direction.

4.3.h Remote Cable Port

Before each use, inspect the remote cable port for dirt, dust or corrosion. Thoroughly clean the receptacle by flushing with water then wipe with a soft cloth or disposable applicator.

4.4 REMOVAL AND REPLACEMENT OF PARTS

Maintenance is authorized for the removal and replacement of a limited number of assemblies. Special tools or equipment are not required for maintaining the DBAL-D2.

4.4.a Remove and Install Battery

See Chapter III, Paragraph 3.2.a for procedures. Figure 4-1 depicts the removal and installation of the battery.

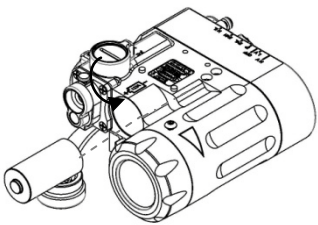

Figure 4-1 Battery Removal and Installation

4.4.b Remove and Replace Battery Cap

NOTE

Remove the Exit Port Cover Retaining Strap first and then remove the Battery Cap Retaining Strap.

Install the Battery Cap Retaining Strap below the Exit Port Cover Retaining Strap below the VIS Exit Port. If necessary, remove the bottom Exit Port Cover strap from the IR LED Illuminator Exit Port Cover then install the Battery Cap Retaining Strap.

To remove, stretch the end of the Retaining Strap over the stud on the Battery Cap then unscrew the battery cap.

To install, stretch the end of the retaining strap over the stud located on the battery cap. Figure 4-2 depicts the removal and replacement of the battery cap.

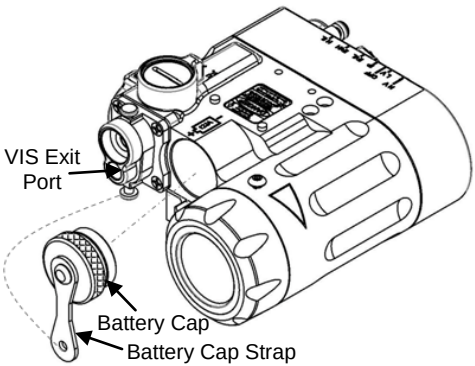

Figure 4-2 Remove and Replace Battery Cap

4.4.c Removal and Replacement of Battery Cap Retaining Strap

To install, stretch the end of the retaining strap over the stud located on the battery cap. Stretch the other end of the retaining strap over the stud located directly below the VIS Exit Port.

To remove, stretch the end of the Retaining Strap over the stud on the Battery Cap then stretch the other end over the stud located directly below the VIS Exit Port. Figure 4-3 depicts the removal and replacement of the battery cap retaining strap.

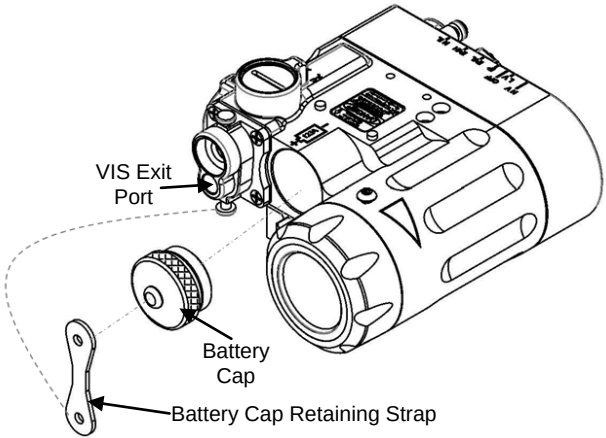

Figure 4-3 Remove and Replace Battery Cap Retaining Strap

4.4.d Removal and Replacement of Battery Cap O-Ring

NOTE

NEVER use a sharp or metal object to remove O-rings as they may damage the O-ring or the O-ring groove contact surface.

Inspect the O-ring for nicks, cracks, cuts or abrasion. Also check to make sure that it feels soft. If damaged, replace the O-ring.

To remove, pull the O-ring out of the groove at the base of the threaded portion of the battery cap. Install the new O-ring by gently pulling it onto the battery cap so that it fits in the groove located at the base of the threaded portion of the battery cap. Figure 4-4 depicts the removal and replacement of the battery cap O-ring.

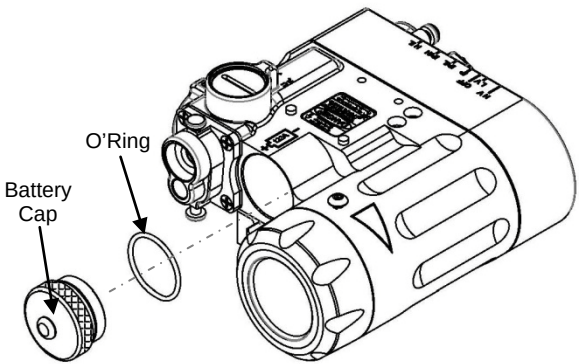

Figure 4-4 Remove and Replace Battery Cap O-Ring

4.4.e Removal and Replacement of Exit Port Cover Retaining Straps

To remove the top Exit Port Cover, pull on the loose end of the Exit Port Cover retaining strap and stretch it over the top stud. Repeat the procedure to remove the bottom Exit Port Cover retaining strap from the DBAL-D2.

To replace the Exit Port Cover Retaining Straps, stretch the end of the retaining strap over the retaining stud located on the bottom of the housing. Repeat the procedure by stretching the loose end of the retaining strap over the stud located on the top of the housing. Figure 4-5 depicts the removal and replacement of the Exit Port cover and retaining straps.

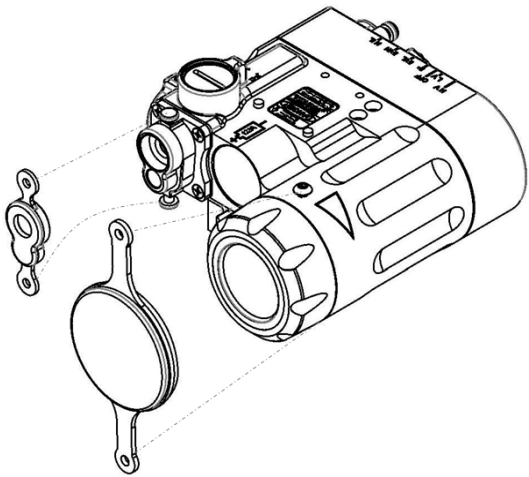

Figure 4-5 Remove and Replace Exit Port Cover Retaining Straps

CHAPTER V

SERVICE/PACKING AND UNPACKING

5.1 WARRANTY INFORMATION

Laser Devices, Inc. will furnish its standard form LIMITED WARRANTY in favor of its customers and the first end users of its products. The terms of the warranty are as follows: All LDI manufactured products (excluding flashlight bulbs, borelight inserts, batteries and other items that are ordinarily consumed during the normal use of the product) have a ONE (1) year limited warranty on parts and workmanship from the date of purchase. The warranty is void if the serial number or the manufacturer's labels affixed to the product have been removed or if the product has been misused, modified, neglected or has been disassembled prior to return to the manufacturer. LDI will repair or replace defective products at its discretion. To the maximum extent permitted by law, LDI's election to repair or replace the device shall constitute the purchaser's sole remedy in the event of a defect. LDI disclaims all other warranties, expressed or implied, including but not limited to implied warranties of merchantability and fitness for a particular purpose. Moreover, to the maximum extent permitted by law, LDI on behalf of itself, its suppliers, distributors, dealers and agents disclaims any and all other liability for damages, including without limitation, actual damages, consequential damages and indirect damages, for personal injury, wrongful death, pecuniary loss and any other physical or financial loss arising out of the use or the inability to use any LDI product even if Laser Devices, Inc. has been advised of the possibility of such damages. This limited warranty gives the purchaser specific legal rights which may vary by state and jurisdiction.

5.2 NON-WARRANTY INFORMATION

Non-warranty repairs are subject to an evaluation fee. DBAL-D^2 devices that are not covered by the warranty will be tested and

evaluated for failure. Customer permission and payment terms will be obtained prior to performing any repairs.

5.3 RETURN INSTRUCTIONS

5.3.a For service, repair or replacement email: Service@laserdevices.com, call 800-235-2162 (outside California) or 831-373-0701 (within California) and ask to speak with Service Representative (SR).

5.3.b Determining reparability: To assist the SR with determining if the item is repairable, please provide the following information:

1. Serial Number of the defective item.
2. Thorough description of the malfunction, defect or damage.
3. An explanation as to how the malfunction, defect or damage occurred, if known.

If the SR determines that the item is under warranty or should be returned for repair, a Return Material Authorization (RMA) number will be provided.

5.3.c Return Procedures: When returning the DBAL-D^2 for service or repair, the following procedures should be followed to prevent any additional damage:

1. Be sure that the DBAL-D^2 is free of all contaminants such as dirt or any other foreign material.
2. Remove the battery.
3. Place the Exit Port Covers over each of the lenses.
4. Place the DBAL-D^2 in the Shipping Case or Carrying Case if available. If the Shipping Case is not available, individually package each DBAL-D^2 device being returned in a suitable container.

5.3.d Shipping: Place the unit and a copy of the test report or detailed description of the failure in a suitable shipping container. Mark the package with the RMA number. Ship by traceable, prepaid means to Laser Devices, Inc., 70 Garden Ct, Monterey, CA 93940.

APPENDIX A

REPAIR PARTS

Figure A-1 and Table A-1 identify the parts that are user replaceable.

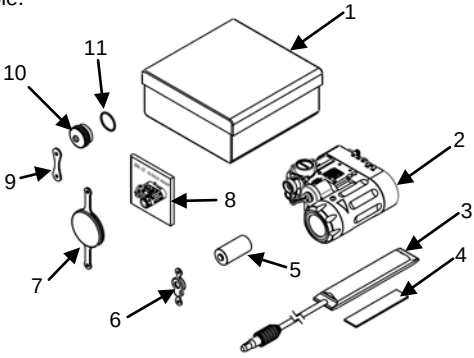

Figure A-1 Repair Parts

Table A-1 Repair Parts List

Item No.	Part No.	Description	QTY
1	L09019/L09180	Shipping Box/Foam Insert	1
2	40300_/40301_	DBAL-D^2	1
3	FA05219-7	Remote Cable Switch, 7”, Straight	1
4	ITP-044	Loop Tape	1
5	B30114	CR 123A Battery	1
6	FA06883-XX	Exit Port Cover, Dual Beam	1
7	FA07202-XX	Exit Port Cover, IR LED illuminator	1
8	100123	Technical Manual	1
9	F3693-XX	Strap, Battery Cap	1
10	FA05805-XX	CR 123A Battery Cap	1
11	C02734	O-Ring	1

NOTES

70 Garden Court • Monterey, CA 93940

Tel 831-373-0701/800-235-2162 (outside CA)
Fax 831-373-0903
Sales@laserdevices.com • www.laserdevices.com

P/N 100123
V2